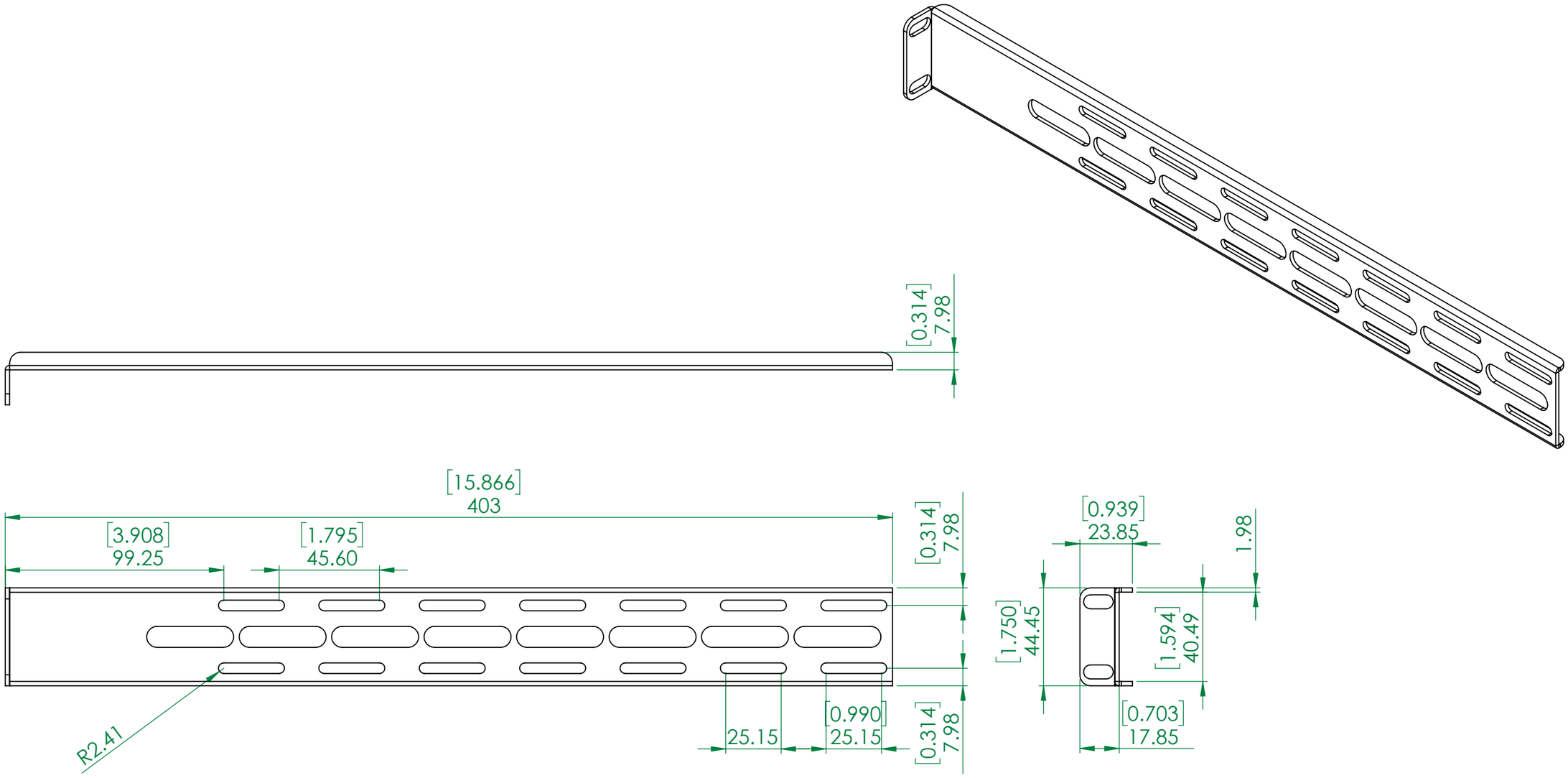

Note:
1. No sharp edges.
2. RoHS: Manufacturer must ensure that all components used must comply with RoHS Regulation.

Industrial Automation & Enclosures
A leading developer of industrial rackmount products
TEL:(516)997-5050 FAX:(516)997-5784

©2016 IAE Inc /www.iaenclosures.com

PROJECT NO.	IAB2403M01-1U	DRAWN		MATERIAL	12 Gauge	UNSPECIFIED TOLERANCES: ±0.15
MODEL	67xxx	APPV'D		FINISH	e-Coat Black	
PART NO.	67xxx	DATE	6/25/2018	SCALE	1:5	SHEET 1 OF 1
PART NAME	4U Panel Drawing	REVISION	V 1.5	PROJECTION	Third Angle	UNIT:mm

CONFIDENTIAL DOCUMENT DO NOT COPY